TECHNICAL DATASHEET

4tecx Doorsteekanker Verzinkt ETA 7 & Doorsteekanker RVS ETA 7

MTH (Doorsteekanker Verzinkt ETA 7)

MTH-A2

MTH-A4 (Doorsteekanker RVS ETA 7)

European Technical Approval
Option 7 EAD 330232-00-0601

CHARACTERISTICS

- Roughness working principle; installation by controlled torque.
- Use for high loads.
- Assessed for two installation depths.
- Easy installation.
- Use in non-cracked concrete.
- Previous installation, or through the fixture.
- Use for static or quasi-static loads.
- Three versions zinc plated, stainless steel A2 and A4.
- Variety of lengths and sizes, assembly flexibility.
- DIN 440 for fixing wood structures to concrete.

BASE MATERIAL

SIZE RANGE

M6 - M20

DRILL HOLE CONDITION

DRY **WET** **FLOODED**

APPLICATION

- Structural applications in non-cracked concrete.
- Safety barriers.
- Billboards, machinery, boilers, signals, Steel beams, etc.
- Fixings wood structures in concrete.

MAXIMUM LOADS RECOMMENDED IN NON CRACKED CONCRETE [kg]

MTH

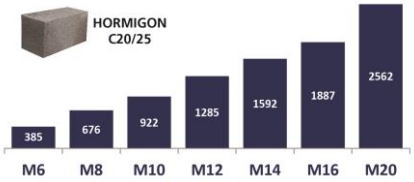

MTH-A2 / MTH-A4

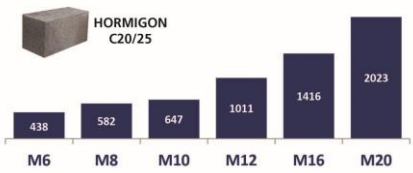

APPLICATION EXAMPLES

Zevij-Necomij B.V.
Postbus 447
4900 AK Oosterhout
T +31 (0) 162-42 69 17
info@zevij-necomij.com
www.4tecx.com

1. RANGE

ITEM	CODE	SIZE	PHOTO	COMPONENT	MATERIAL
1	**AH** **Doorsteekanker** **Verzinkt ETA 7**	M6 to M20		Bolt Clip Nut Washer	Carbon steel cold formed, zinc-plated ≥ 5µm Carbon steel, zinc-plated ≥ 5µm DIN 934 class 6 ISO 898-1 zinc-plated ≥ 5µm DIN 125, DIN 9021 o DIN 440 zinc-plated ≥ 5µm
2	**MI**	M6 to M20		Bolt Clip Nut Washer	Stainless steel, grade A2 Stainless steel, grade A2 DIN 934 stainless steel, grade A2 DIN 125, DIN 9021 o DIN 440 stainless steel, grade A2
3	**MIA4** **Doorsteekanker** **RVS ETA 7**	M6 to M20		Bolt Clip Nut Washer	Stainless steel, grade A4 Stainless steel, grade A4 DIN 934 stainless steel, grade A4 DIN 125, DIN 9021 o DIN 440 stainless steel, grade A4

2. ACCESSORIES

ITEM	CODE	PHOTO	DESCRIPTION
1	**DOMTA**		Accessory for anchor installation with hammer drill

3. INSTALLATION DATA

3.1. INSTALLATION DRAWING

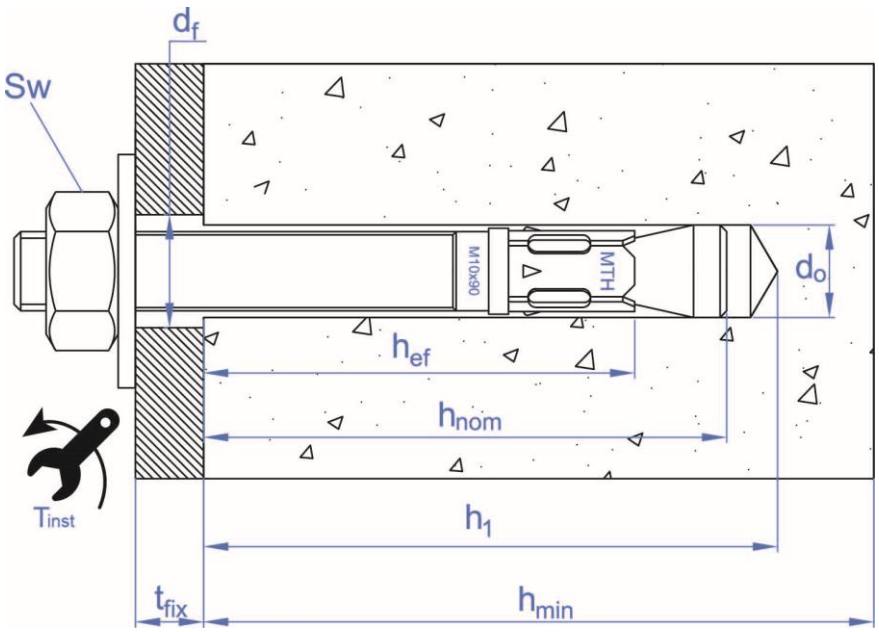

Zevij-Necomij B.V.
Postbus 447
4900 AK Oosterhout
T +31 (0) 162-42 69 17
info@zevij-necomij.com
www.4tecx.com

3.2. INSTALLATION PARAMETERS

General installation parameters									Standard installation depth									Reduced installation depth								
Family	Code	Size / Bolt Letter	Assessed	Drill bit diameter	Fixture clearance hole	Torque	Minimum allowable spacing	Minimum allowable edge distance	Minimum concrete thickness	Depth of drill hole ≥	Installation depth	Effective anchorage depth	Thickness of fixture ≤	Critical spacing (concrete cono)	Critical edge distance(concrete cone)	Critical spacing (splitting)	Critical edge distance(splitting)	Minimum concrete thickness	Depth of drill hole ≥	Installation depth	Effective anchorage depth	Thickness of fixture ≤	Critical spacing (concrete cono)	Critical edge distance(concrete cone)	Critical spacing (splitting)	Critical edge distance(splitting)
[--]	[--]	[--]	ETA	d_0	d_f	T_{inst}	S_{min}	C_{min}	h_{min}	h_1	h_{nom}	h_{ef}	t_{fix}	$S_{cr,N}$	$C_{cr,N}$	$S_{cr,sp}$	$C_{cr,sp}$	h_{min}	h_1	h_{nom}	h_{ef}	t_{fix}	$S_{cr,N}$	$C_{cr,N}$	$S_{cr,sp}$	$C_{cr,sp}$
				[mm]	[mm]	[Nm]	[mm]	[mm]	[mm]	[mm]	[mm]	[mm]	[mm]	[mm]	[mm]	[mm]	[mm]	[mm]	[mm]	[mm]	[mm]	[mm]	[mm]	[mm]	[mm]	[mm]
MTH - Doorsteekanker Verzinkt ETA 7	4050001300	M6 x 60 (B)	✓	6	7	7	35	35	100	55	49,5	40	2	120	60	160	80	--	--	--	--	--	--	--	--	--
	AH06070	M6 x 70 (C)	✓										12									--				
	AH06080	M6 x 80 (D)	✓										22									--				
	AH06090	M6 x 90 (E)	✓										32									--				
	AH06100	M6 x 100 (E)	✓										42									--				
	AH06110	M6 x 110 (F)	✓										52									--				
	AH06120	M6 x 120 (G)	✓										62									--				
	AH06130	M6 x 130 (H)	✓										72									--				
	AH06140	M6 x 140 (I)	✓										82									--				
	AH06150	M6 x 150 (I)	✓										92									--				
	AH06160	M6 x 160 (J)	✓										102									--				
	AH06170	M6 x 170 (K)	✓										112									--				
	AH06180	M6 x 180 (L)	✓										122									--				
	4050001308	M8 x 60 (B)	✓	8	9	20	40	40	--	--	--	--	--	--	--	--	--	100	50	46,5	35	3	105	53	140	70
	4050001316	M8 x 75 (C)	✓						100	65	59,5	48	5	144	72	192	96					18				
	4050001324	M8 x 90 (E)	✓										20									33				
	AH08100	M8 x 100 (E)	✓										30									43				
	4050001332	M8 x 115 (G)	✓										45									58				
	AH08120	M8 x 120 (G)	✓										50									63				
	4050001340	M8 x 130 (H)	✓										60									73				
	AH08155	M8 x 155 (J)	✓										85									98				
	4050001348	M10 x 70 (C)	✓	10	12	35	50	50	--	--	--	--	--	--	--	--	--	100	60	53,5	42	3	126	63	168	84
	AH10080	M10 x 80 (D)	✓						--	--	--	--	--	--	--	--	--					13				
	4050001356	M10 x 90 (E)	✓						110	75	66,5	55	10	165	83	220	110					23				
	4050001364	M10 x 100 (E)	✓										20									33				
	4050001372	M10 x 120 (G)	✓										40									53				

3.2. INSTALLATION PARAMETERS

				General installation parameters					Standard installation depth									Reduced installation depth								
Family	Code	Size / Bolt Letter	Assessed	Drill bit diameter	Fixture clearance hole	Torque	Minimum allowable spacing	Minimum allowable edge distance	Minimum concrete thickness	Depth of drill hole ≥	Installation depth	Effective anchorage depth	Thickness of fixture VI	Critical spacing (concrete cono)	Critical edge distance(concrete cono)	Critical spacing (splitting)	Critical edge distance(splitting)	Minimum concrete thickness	Depth of drill hole ≥	Installation depth	Effective anchorage depth	Thickness of fixture VI	Critical spacing (concrete cono)	Critical edge distance(concrete cone)	Critical spacing (splitting)	Critical edge distance(splitting)
[--]	[--]	[--]	ETA	d_0	d_f	T_{inst}	S_{min}	C_{min}	h_{min}	h_1	h_{nom}	h_{ef}	t_{fix}	$S_{cr,N}$	$C_{cr,N}$	$S_{cr,sp}$	$C_{cr,sp}$	h_{min}	h_1	h_{nom}	h_{ef}	t_{fix}	$S_{cr,N}$	$C_{cr,N}$	$S_{cr,sp}$	$C_{cr,sp}$
				[mm]	[mm]	[Nm]	[mm]	[mm]	[mm]	[mm]	[mm]	[mm]	[mm]	[mm]	[mm]	[mm]	[mm]	[mm]	[mm]	[mm]	[mm]	[mm]	[mm]	[mm]	[mm]	[mm]
MTH - Doorsteekanker Verzinkt ETA 7	AH10140	M10 x 140 (I)	✓	10	12	35	50	50	110	75	66,5	55	60	165	83	220	110	100	60	53,5	42	73	126	63	168	84
	4050001380	M10 x 150 (I)	✓										70									83				
	AH10160	M10 x 160 (J)	✓										80									93				
	AH10170	M10 x 170 (K)	✓										90									103				
	AH10210	M10 x 210 (N)	✓										130									143				
	AH10230	M10 x 230 (P)	✓										150									163				
	4050001388	M12 x 90 (E)	✓	12	14	60	70	70	--	--	--	--	--	--	--	--	--	100	70	62	50	13	150	75	200	100
	4050001396	M12 x 100 (E)	✓						130	85	77	65	8	195	98	260	130					23				
	4050001404	M12 x 110 (F)	✓										18									33				
	4050001412	M12 x 120 (G)	✓										28									43				
	AH12130	M12 x 130 (H)	✓										38									53				
	4050001420	M12 x 140 (I)	✓										48									63				
	AH12160	M12 x 160 (J)	✓										68									83				
	AH12180	M12 x 180 (L)	✓										88									103				
	AH12200	M12 x 200 (M)	✓										108									123				
	AH12220	M12 x 220 (O)	✓										128									143				
	AH12250	M12 x 250 (Q)	✓										158									173				
	AH14120	M14 x 120 (G)	✓	14	16	90	80	80	150	100	91	75	12	225	113	300	150	--	--	--	--	--	--	--	--	--
	AH14145	M14 x 145 (I)	✓										37									--				
	AH14170	M14 x 170 (K)	✓										62									--				
	AH14220	M14 x 220 (O)	✓										112									--				
	AH14250	M14 x 250 (Q)	✓										142									--				

3.2. INSTALLATION PARAMETERS

General installation parameters									Standard installation depth									Reduced installation depth								
Family	Code	Size / Bolt Letter	Assessed	Drill bit diameter	Fixture clearance hole	Torque	Minimum allowable spacing	Minimum allowable edge distance	Minimum concrete thickness	Depth of drill hole ≥	Installation depth	Effective anchorage depth	Thickness of fixture ≤	Critical spacing (concrete cono)	Critical edge distance(concrete cone)	Critical spacing (splitting)	Critical edge distance(splitting)	Minimum concrete thickness	Depth of drill hole ≥	Installation depth	Effective anchorage depth	Thickness of fixture ≤	Critical spacing (concrete cono)	Critical edge distance(concrete cone)	Critical spacing (splitting)	Critical edge distance(splitting)
[--]	[--]	[--]	ETA	d_0	d_f	T_{inst}	S_{min}	C_{min}	h_{min}	h_1	h_{nom}	h_{ef}	t_{fix}	$S_{cr,N}$	$C_{cr,N}$	$S_{cr,sp}$	$C_{cr,sp}$	h_{min}	h_1	h_{nom}	h_{ef}	t_{fix}	$S_{cr,N}$	$C_{cr,N}$	$S_{cr,sp}$	$C_{cr,sp}$
				[mm]	[mm]	[Nm]	[mm]	[mm]	[mm]	[mm]	[mm]	[mm]	[mm]	[mm]	[mm]	[mm]	[mm]	[mm]	[mm]	[mm]	[mm]	[mm]	[mm]	[mm]	[mm]	[mm]
MTH -	4050001428	M16 x 125 (G)	✓	16	18	120	90	90	168	110	103,5	84	3	252	126	280	140	130	90	84,5	65	22	195	98	260	130
	4050001436	M16 x 145 (I)	✓										23									42				
	AH16170	M16 x 170 (K)	✓										48									67				
	AH16220	M16 x 220 (O)	✓										98									117				
	AH16250	M16 x 250 (Q)	✓										128									147				
	AH16280	M16 x 280 (S)	✓										158									177				
	AH20170	M20 x 170 (K)	✓	20	22	240	135	135	206	135	125	103	23	309	155	360	180	150	107	97	75	49	225	113	300	150
	AH20220	M20 x 220 (O)	✓										73									99				
	AH20270	M20 x 270 (S)	✓										123									149				
MTH-A2	MI06045	M6 x 45 (A)	[x]	6	7	7	50	50	--	--	--	--	--	--	--	--	--	100	40	35	25	1	75	38	160	80
	MI06060	M6 x 60 (B)	✓						100	55	49,5	40	2	120	60	160	80	--	--	--	--	--	--	--	--	--
	MI06080	M6 x 80 (D)	✓										22									--				
	MI06120	M6 x 120 (G)	✓										62									--				
	MI06140	M6 x 140 (I)	✓										82									--				
	MI06160	M6 x 160 (J)	✓										102									--				
	MI06170	M6 x 170 (K)	✓										112									--				
	MI06180	M6 x 180 (L)	✓										122									--				
	MI08050	M8 x 50 (A)	[x]	8	9	20	65	65	--	--	--	--	--	--	--	--	--	100	40	35	23	4	69	35	140	70
	MI08075	M8 x 75 (C)	✓						100	65	59,5	48	5	144	72	192	96	100	50	46,5	35	18	105	53	140	70
	MI08090	M8 x 90 (E)	✓										20									33				
	MI08115	M8 x 115 (G)	✓										45									58				
	MI10070	M10 x 70 (C)	✓	10	12	35	70	70	--	--	--	--	--	--	--	--	--	100	60	53,5	42	3	126	63	168	84
	MI10090	M10 x 90 (D)	✓						110	75	66,5	55	10	165	83	220	110					23				
	MI10120	M10 x 120 (G)	✓										40									53				
	MI10150	M10 x 150 (I)	✓										70									83				

3.2. INSTALLATION PARAMETERS

General installation parameters									Standard installation depth									Reduced installation depth								
Family	Code	Size / Bolt Letter	Assessed	Drill bit diameter	Fixture clearance hole	Torque	Minimum allowable spacing	Minimum allowable edge distance	Minimum concrete thickness	Depth of drill hole ≥	Installation depth	Effective anchorage depth	Thickness of fixture ≤	Critical spacing (concrete cono)	Critical edge distance(concrete cone)	Critical spacing (splitting)	Critical edge distance(splitting)	Minimum concrete thickness	Depth of drill hole ≥	Installation depth	Effective anchorage depth	Thickness of fixture ≤	Critical spacing (concrete cono)	Critical edge distance(concrete cone)	Critical spacing (splitting)	Critical edge distance(splitting)
[--]	[--]	[--]	ETA	d_0	d_f	T_{inst}	S_{min}	C_{min}	h_{min}	h_1	h_{nom}	h_{ef}	t_{fix}	$S_{cr,N}$	$C_{cr,N}$	$S_{cr,sp}$	$C_{cr,sp}$	h_{min}	h_1	h_{nom}	h_{ef}	t_{fix}	$S_{cr,N}$	$C_{cr,N}$	$S_{cr,sp}$	$C_{cr,sp}$
				[mm]	[mm]	[Nm]	[mm]	[mm]	[mm]	[mm]	[mm]	[mm]	[mm]	[mm]	[mm]	[mm]	[mm]	[mm]	[mm]	[mm]	[mm]	[mm]	[mm]	[mm]	[mm]	[mm]
MTH-A2	MI12075	M12 x 75 (C)	[x]	12	14	60	85	85	--	--	--	--	--	--	--	--	--	100	60	55	43	5	129	65	200	100
	MI12090	M12 x 90 (D)	✓						--	--	--	--	--	--	--	--	--	100	70	62	50	13	150	75	200	100
	MI12110	M12 x 110 (F)	✓						130	85	77	65	18	195	98	260	130					33				
	MI12140	M12 x 140 (I)	✓										48									63				
	MI16090	M16 x 90 (D)	[x]	16	18	120	110	110	--	--	--	--	--	--	--	--	--	100	75	69	49	4	147	74	280	140
	MI16145	M16 x 145 (I)	✓						168	110	103,5	84	23	252	126	336	168	--	--	--	--	--	--	--	--	--
	MI16170	M16 x 170 (K)	✓										48									--				
	MI20120	M20 x 120 (G)	[x]	20	22	240	135	135	--	--	--	--	--	--	--	--	--	145	105	93	71	5	213	107	360	180
	MI20170	M20 x 170 (K)	✓						206	135	125	103	23	309	155	412	200	--	--	--	--	--	--	--	--	--
	MI20220	M20 x 220 (O)	✓										73									--				
MTH-A4 - Doorsteekanker RVS ETA 7	MIA406045	M6 x 45 (A)	[x]	6	7	7	50	50	--	--	--	--	--	--	--	--	--	100	40	35	25	1	75	38	160	80
	4050001400	M6 x 60 (B)	✓						100	55	49,5	40	2	120	60	160	80	--	--	--	--	--	--	--	--	--
	4050001408	M6 x 80 (D)	✓										22													
	4050001416	M8 x 50 (A)	[x]	8	9	20	65	65	--	--	--	--	--	--	--	--	--	100	40	35	23	4	69	35	140	70
	4050001424	M8 x 75 (C)	✓						100	65	59,5	48	5	144	72	192	96	100	50	46,5	35	8	105	53	140	70
	4050001432	M8 x 90 (E)	✓										20									23				
	4050001440	M8 x 115 (G)	✓										45									58				
	4050001448	M10 x 70 (C)	✓	10	12	35	70	70	--	--	--	--	--	--	--	--	--	100	60	53,5	42	3	126	63	168	84
	4050001456	M10 x 90 (D)	✓						110	75	66,5	55	10	165	83	220	110					23				
	4050001464	M10 x 120 (G)	✓										40									53				
	MIA410150	M10 x 150 (I)	✓										70									83				
	4050001472	M12 x 75 (C)	[x]	12	14	60	85	85	--	--	--	--	--	--	--	--	--	100	60	55	43	5	129	65	200	100
	4050001480	M12 x 90 (D)	✓						--	--	--	--	--	--	--	--	--	100	70	62	50	13	150	75	200	100
	4050001488	M12 x 110 (F)	✓						130	85	77	65	18	195	98	260	130					33				
	4050001496	M12 x 140 (I)	✓										48									63				

Zevij-Necomij B.V.
Postbus 447
4900 AK Oosterhout
T +31 (0) 162-42 69 17
info@zevij-necomij.com
www.4tecx.com

3.2. INSTALLATION PARAMETERS

General installation parameters									Standard installation depth									Reduced installation depth								
Family	Code	Size / Bolt Letter	Assessed	Drill bit diameter	Fixture clearance hole	Torque	Minimum allowable spacing	Minimum allowable edge distance	Minimum concrete thickness	Depth of drill hole ≥	Installation depth	Effective anchorage depth	Thickness of fixture ≤	Critical spacing (concrete cono)	Critical edge distance(concrete cone)	Critical spacing (splitting)	Critical edge distance(splitting)	Minimum concrete thickness	Depth of drill hole ≥	Installation depth	Effective anchorage depth	Thickness of fixture ≤	Critical spacing (concrete cono)	Critical edge distance(concrete cone)	Critical spacing (splitting)	Critical edge distance(splitting)
[--]	[--]	[--]	ETA	d_0	d_f	T_{inst}	S_{min}	C_{min}	h_{min}	h_1	h_{nom}	h_{ef}	t_{fix}	$S_{cr,N}$	$C_{cr,N}$	$S_{cr,sp}$	$C_{cr,sp}$	h_{min}	h_1	h_{nom}	h_{ef}	t_{fix}	$S_{cr,N}$	$C_{cr,N}$	$S_{cr,sp}$	$C_{cr,sp}$
				[mm]	[mm]	[Nm]	[mm]	[mm]	[mm]	[mm]	[mm]	[mm]	[mm]	[mm]	[mm]	[mm]	[mm]	[mm]	[mm]	[mm]	[mm]	[mm]	[mm]	[mm]	[mm]	[mm]
MTH-A4	MIA416090	M16 x 90 (D)	[x]	16	18	120	110	110	--	--	--	--	--	--	--	--	--	100	75	69	49	4	147	74	280	140
	4050001504	M16 x 145 (I)	✓						168	110	103,5	84	23	252	126	336	168	--	--	--	--	--	--	--	--	--
	MIA416170	M16 x 170 (K)	✓										48													
	MIA420120	M20 x 120 (G)	[x]	20	22	240	135	135	--	--	--	--	--	--	--	--	--	145	105	93	71	5	213	107	360	180
	MIA420170	M20 x 170 (K)	✓						206	135	125	103	23	309	155	412	206	--	--	--	--	--	--	--	--	--
	MIA420220	M20 x 220 (O)	✓										73													

4. INSTALLATION PROCEDURE

4.1 CONCRETE INSTALLATION

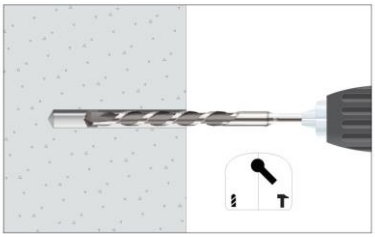	**1. DRILLING** Check the concrete is well compacted and without significant porosity. Suitable for dry, wet and flooded holes. Use drill in hammer mode. Drill according to specified depths in previous tables.
	2. BLOW AND CLEAN Clean the hole from dust and concrete remains. Use blow pump and brush.
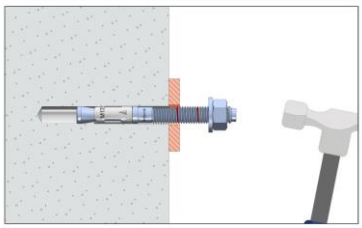	**3. INSTALL** Insert the anchor until the red depth mark is at the same level with the surface of the base material. Use a hammer in case of need. DOMTA tool could be used alternatively. Installation could be performed through the fixture or before setting the fixture.
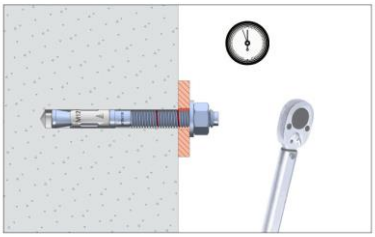	**4. APPLY THE TORQUE** Apply the nominal torque specified in previous tables. Use torque wrench in order to ensure correct installation.

Zevij-Necomij B.V.
Postbus 447
4900 AK Oosterhout
T +31 (0) 162-42 69 17
info@zevij-necomij.com
www.4tecx.com

5. RESISTANCES

Resistances in concrete class C20/25 for an isolated anchor without spacing or concrete edge distance effects are indicated in the following table:

5.1 CHARACTERISTIC RESISTANCE [kN]

General Parameter				Standard installation depth		Reduced installation depth	
Family	Code	Size	Assessed	Tension	Shear	Tension	Shear
				N_{Rk}	V_{Rk}	N_{Rk}	V_{Rk}
MTH - Doorsteekan-ker Verzinkt ETA 7	4050001300	M6 x 60	✓	*7,4*	*5,1*	--	--
	AH06070	M6 x 70	✓				
	AH06080	M6 x 80	✓				
	AH06090	M6 x 90	✓				
	AH06100	M6 x 100	✓				
	AH06110	M6 x 110	✓				
	AH06120	M6 x 120	✓				
	AH06130	M6 x 130	✓				
	AH06140	M6 x 140	✓				
	AH06150	M6 x 150	✓				
	AH06160	M6 x 160	✓				
	AH06170	M6 x 170	✓				
	AH06180	M6 x 180	✓				
	4050001308	M8 x 60	✓	--	--	10,0	**10,4**
	4050001316	M8 x 75	✓	*13,0*	*9,3*	10,0	**10,4**
	4050001324	M8 x 90	✓				
	AH08100	M8 x 100	✓				
	4050001332	M8 x 115	✓				
	AH08120	M8 x 120	✓				
	4050001340	M8 x 130	✓				
	AH08155	M8 x 155	✓				
	4050001348	M10 x 70	✓	--	--	**13,7**	**13,7**
	AH10080	M10 x 80	✓				
	4050001356	M10 x 90	✓	19,0	*14,7*	**13,7**	**13,7**
	4050001364	M10 x 100	✓				
	4050001372	M10 x 120	✓				
	AH10140	M10 x 140	✓				
	4050001380	M10 x 150	✓				
	AH10160	M10 x 160	✓				
	AH10170	M10 x 170	✓				
	AH10210	M10 x 210	✓				
	AH10230	M10 x 230	✓				
	4050001388	M12 x 90	✓	--	--	**17,8**	**17,8**
	4050001396	M12 x 100	✓	**26,4**	*20,6*	**17,8**	**17,8**
	4050001404	M12 x 110	✓				
	4050001412	M12 x 120	✓				
	AH12130	M12 x 130	✓				
	4050001420	M12 x 140	✓				
	AH12160	M12 x 160	✓				
	AH12180	M12 x 180	✓				
	AH12200	M12 x 200	✓				
	AH12220	M12 x 220	✓				
	AH12250	M12 x 250	✓				
	AH14120	M14 x 120	✓	**32,8**	*28,1*	--	--
	AH14145	M14 x 145	✓				
	AH14170	M14 x 170	✓				
	AH14220	M14 x 220	✓				
	AH14250	M14 x 250	✓				

General Parameter				Standard installation depth		Reduced installation depth	
Family	Code	Size	Assessed	Tension	Shear	Tension	Shear
				N_{Rk}	V_{Rk}	N_{Rk}	V_{Rk}
MTH Doorsteekan-ker Verzinkt ETA 7	4050001428	M16 x 125	✓	**38,8**	*38,4*	**26,4**	*38,4*
	4050001436	M16 x 145	✓				
	AH16170	M16 x 170	✓				
	AH16220	M16 x 220	✓				
	AH16250	M16 x 250	✓				
	AH16280	M16 x 280	✓				
	AH20170	M20 x 170	✓	**52,7**	*56,3*	**32,8**	**65,6**
	AH20220	M20 x 220	✓				
	AH20270	M20 x 270	✓				
MTH-A2	MI06045	M6 x 45	[x]	--	--	**6,3**	*6,0*
	MI06060	M6 x 60	✓	*10,1*	*6,0*	--	--
	MI06080	M6 x 80	✓				
	MI06120	M6 x 120	✓				
	MI06140	M6 x 140	✓				
	MI06160	M6 x 160	✓				
	MI06170	M6 x 170	✓				
	MI06180	M6 x 180	✓				
	MI08050	M8 x 50	[x]	--	--	**5,5**	**5,5**
	MI08075	M8 x 75	✓	12,0	*10,9*	9,0	**10,4**
	MI08090	M8 x 90	✓				
	MI08115	M8 x 115	✓				
	MI10070	M10 x 70	✓	--	--	12,0	**13,7**
	MI10090	M10 x 90	✓	16,0	*17,4*		
	MI10120	M10 x 120	✓				
	MI10150	M10 x 150	✓				
	MI12075	M12 x 75	[x]	--	--	**14,2**	**14,2**
	MI12090	M12 x 90	✓	--	--	16,0	**17,8**
	MI12110	M12 x 110	✓	25,0	*25,2*		
	MI12140	M12 x 140	✓				
	MI16090	M16 x 90	[x]	--	--	**17,3**	**17,3**
	MI16145	M16 x 145	✓	35,0	*47,1*	--	--
	MI16170	M16 x 170	✓				
	MI20120	M20 x 120	[x]	--	--	**30,2**	**60,4**
	MI20170	M20 x 170	✓	50,0	*73,5*	--	--
	MI20220	M20 x 220	✓				
MTH-A4 - Doorsteekan-ker RVS ETA 7	MIA406045	M6 x 45	[x]	--	--	**6,3**	*6,0*
	4050001400	M6 x 60	✓	*10,1*	*6,0*	--	--
	4050001408	M6 x 80	✓				
	4050001416	M8 x 50	[x]	--	--	**5,5**	**5,5**
	4050001424	M8 x 75	✓	12,0	*10,9*	9,0	**10,4**
	4050001432	M8 x 90	✓				
	4050001440	M8 x 115	✓				
	4050001448	M10 x 70	✓	--	--	12,0	**13,7**
	4050001456	M10 x 90	✓	16,0	*17,4*		
	4050001464	M10 x 120	✓				
	MIA410150	M10 x 150	✓				
	4050001472	M12 x 75	[x]	--	--	**14,2**	**14,2**
	4050001480	M12 x 90	✓	--	--	16,0	**17,8**
	4050001488	M12 x 110	✓	25,0	*25,2*		
	4050001496	M12 x 140	✓				
	MIA416090	M16 x 90	[x]	--	--	**17,3**	**17,3**
	4050001504	M16 x 145	✓	35,0	*47,1*	--	--
	MIA416170	M16 x 170	✓				
	MIA420120	M20 x 120	[x]	--	--	**30,2**	**60,4**
	MIA420170	M20 x 170	✓	50,0	*73,5*	--	--
	MIA420220	M20 x 220	✓				

1 KN ≈ 100 kg

Values *underlined and in italics* show Steel failure, **bold** values concrete failure and other indicate pull out failure.

5.2 DESIGN RESISTANCE [kN]

General Parameter				Standard installation depth		Reduced installation depths	
Family	Code	Size	Assessed	Tension	Shear	Tension	Shear
				N_{Rd}	V_{Rd}	N_{Rd}	V_{Rd}
MTH - Doorsteekan-ker Verzinkt ETA 7	4050001300	M6 x 60	✓	*5,3*	*4,1*	--	--
	AH06070	M6 x 70	✓				
	AH06080	M6 x 80	✓				
	AH06090	M6 x 90	✓				
	AH06100	M6 x 100	✓				
	AH06110	M6 x 110	✓				
	AH06120	M6 x 120	✓				
	AH06130	M6 x 130	✓				
	AH06140	M6 x 140	✓				
	AH06150	M6 x 150	✓				
	AH06160	M6 x 160	✓				
	AH06170	M6 x 170	✓				
	AH06180	M6 x 180	✓				
	4050001308	M8 x 60	✓	--	--	6,7	**7,0**
	4050001316	M8 x 75	✓	*9,2*	*7,4*	6,7	**7,0**
	4050001324	M8 x 90	✓				
	AH08100	M8 x 100	✓				
	4050001332	M8 x 115	✓				
	AH08120	M8 x 120	✓				
	4050001340	M8 x 130	✓				
	AH08155	M8 x 155	✓				
	4050001348	M10 x 70	✓	--	--	**9,1**	**9,1**
	AH10080	M10 x 80	✓				
	4050001356	M10 x 90	✓	12,7	*11,8*	**9,1**	**9,1**
	4050001364	M10 x 100	✓				
	4050001372	M10 x 120	✓				
	AH10140	M10 x 140	✓				
	4050001380	M10 x 150	✓				
	AH10160	M10 x 160	✓				
	AH10170	M10 x 170	✓				
	AH10210	M10 x 210	✓				
	AH10230	M10 x 230	✓				
	4050001388	M12 x 90	✓	--	--	**11,9**	**11,9**
	4050001396	M12 x 100	✓	**17,6**	*16,4*	**11,9**	**11,9**
	4050001404	M12 x 110	✓				
	4050001412	M12 x 120	✓				
	AH12130	M12 x 130	✓				
	4050001420	M12 x 140	✓				
	AH12160	M12 x 160	✓				
	AH12180	M12 x 180	✓				
	AH12200	M12 x 200	✓				
	AH12220	M12 x 220	✓				
	AH12250	M12 x 250	✓				
	AH14120	M14 x 120	✓	**21,8**	*22,5*	--	--
	AH14145	M14 x 145	✓				
	AH14170	M14 x 170	✓				
	AH14220	M14 x 220	✓				
	AH14250	M14 x 250	✓				

General Parameter				Standard installation depth		Reduced installation depth	
Family	Code	Size	Assessed	Tension	Shear	Tension	Shear
				N_{Rd}	V_{Rd}	N_{Rd}	V_{Rd}
MTH - Doorsteekan-ker Verzinkt ETA 7	4050001428	M16 x 125	✓	**25,9**	*30,7*	**17,6**	*30,7*
	4050001436	M16 x 145	✓				
	AH16170	M16 x 170	✓				
	AH16220	M16 x 220	✓				
	AH16250	M16 x 250	✓				
	AH16280	M16 x 280	✓				
	AH20170	M20 x 170	✓	**35,1**	*45,1*	**21,8**	**43,7**
	AH20220	M20 x 220	✓				
	AH20270	M20 x 270	✓				
MTH-A2	MI06045	M6 x 45	[x]	--	--	**4,2**	*3,9*
	MI06060	M6 x 60	✓	*6,0*	*3,9*	--	--
	MI06080	M6 x 80	✓				
	MI06120	M6 x 120	✓				
	MI06140	M6 x 140	✓				
	MI06160	M6 x 160	✓				
	MI06170	M6 x 170	✓				
	MI06180	M6 x 180	✓				
	MI08050	M8 x 50	[x]	--	--	**3,1**	**3,7**
	MI08075	M8 x 75	✓	8,0	*7,1*	5,0	**7,0**
	MI08090	M8 x 90	✓				
	MI08115	M8 x 115	✓				
	MI10070	M10 x 70	✓	--	--	6,7	**9,1**
	MI10090	M10 x 90	✓	8,9	11,4		
	MI10120	M10 x 120	✓				
	MI10150	M10 x 150	✓				
	MI12075	M12 x 75	[x]	--	--	**7,9**	**9,5**
	MI12090	M12 x 90	✓	--	--	8,9	**11,9**
	MI12110	M12 x 110	✓	13,9	*16,6*		
	MI12140	M12 x 140	✓				
	MI16090	M16 x 90	[x]	--	--	**9,6**	**11,5**
	MI16145	M16 x 145	✓	19,4	*30,1*	--	--
	MI16170	M16 x 170	✓				
	MI20120	M20 x 120	[x]	--	--	**16,7**	**40,2**
	MI20170	M20 x 170	✓	27,8	*48,3*	--	--
	MI20220	M20 x 220	✓				
MTH-A4 - Doorsteekan-ker RVS ETA 7	MIA406045	M6 x 45	[x]	--	--	**4,2**	*3,9*
	4050001400	M6 x 60	✓	*6,0*	*3,9*	--	--
	4050001408	M6 x 80	✓				
	4050001416	M8 x 50	[x]	--	--	**3,1**	**3,7**
	4050001424	M8 x 75	✓	8,0	*7,1*	5,0	**7,0**
	4050001432	M8 x 90	✓				
	4050001440	M8 x 115	✓				
	4050001448	M10 x 70	✓	--	--	6,7	**9,1**
	4050001456	M10 x 90	✓	8,9	*11,4*		
	4050001464	M10 x 120	✓				
	MIA410150	M10 x 150	✓				
	4050001472	M12 x 75	[x]	--	--	**7,9**	**9,5**
	4050001480	M12 x 90	✓	--	--	8,9	**11,9**
	4050001488	M12 x 110	✓	13,9	*16,6*		
	4050001496	M12 x 140	✓				
	MIA416090	M16 x 90	[x]	--	--	**9,6**	**11,5**
	4050001504	M16 x 145	✓	19,4	*30,1*	--	--
	MIA416170	M16 x 170	✓				
	MIA420120	M20 x 120	[x]	--	--	**16,7**	**40,2**
	MIA420170	M20 x 170	✓	27,8	*48,3*	--	--
	MIA420220	M20 x 220	✓				

1 KN ≈ 100 kg

Values *underlined and in italics* show Steel failure, **bold** values concrete failure and other indicate pull out failure.

5.3 MAXIMUM LOADS RECOMMENDED [kN] (with γ_F= 1.4)

General Parameter				Standard installation depth		Reduced installation depth	
Family	Code	Size	Assessed	Tension	Shear	Tension	Shear
				N_{rec}	V_{rec}	N_{rec}	V_{rec}
MTH - Doorsteekan-ker Verzinkt ETA 7	4050001300	M6 x 60	✓	*3,8*	*2,9*	--	--
	AH06070	M6 x 70	✓				
	AH06080	M6 x 80	✓				
	AH06090	M6 x 90	✓				
	AH06100	M6 x 100	✓				
	AH06110	M6 x 110	✓				
	AH06120	M6 x 120	✓				
	AH06130	M6 x 130	✓				
	AH06140	M6 x 140	✓				
	AH06150	M6 x 150	✓				
	AH06160	M6 x 160	✓				
	AH06170	M6 x 170	✓				
	AH06180	M6 x 180	✓				
	4050001308	M8 x 60	✓	--	--	4,8	**5,0**
	4050001316	M8 x 75	✓	*6,6*	*5,3*	4,8	**5,0**
	4050001324	M8 x 90	✓				
	AH08100	M8 x 100	✓				
	4050001332	M8 x 115	✓				
	AH08120	M8 x 120	✓				
	4050001340	M8 x 130	✓				
	AH08155	M8 x 155	✓				
	4050001348	M10 x 70	✓	--	--	**6,5**	**6,5**
	AH10080	M10 x 80	✓				
	4050001356	M10 x 90	✓	9,0	*8,4*	**6,5**	**6,5**
	4050001364	M10 x 100	✓				
	4050001372	M10 x 120	✓				
	AH10140	M10 x 140	✓				
	4050001380	M10 x 150	✓				
	AH10160	M10 x 160	✓				
	AH10170	M10 x 170	✓				
	AH10210	M10 x 210	✓				
	AH10230	M10 x 230	✓				
	4050001388	M12 x 90	✓	--	--	**8,5**	**8,5**
	4050001396	M12 x 100	✓	**12,6**	*11,8*	**8,5**	**8,5**
	4050001404	M12 x 110	✓				
	4050001412	M12 x 120	✓				
	AH12130	M12 x 130	✓				
	4050001420	M12 x 140	✓				
	AH12160	M12 x 160	✓				
	AH12180	M12 x 180	✓				
	AH12200	M12 x 200	✓				
	AH12220	M12 x 220	✓				
	AH12250	M12 x 250	✓				
	AH14120	M14 x 120	✓	**15,6**	*16,0*	--	--
	AH14145	M14 x 145	✓				
	AH14170	M14 x 170	✓				
	AH14220	M14 x 220	✓				
	AH14250	M14 x 250	✓				

General Parameter				Standard depth		Reduced installation depth	
Family	Code	Size	Assessed	Tension	Shear	Tension	Shear
				N_{rec}	V_{rec}	N_{rec}	V_{rec}
MTH - Doorsteekan-ker Verzinkt ETA 7	4050001428	M16 x 125	✓	**18,5**	*21,9*	**12,6**	*21,9*
	4050001436	M16 x 145	✓				
	AH16170	M16 x 170	✓				
	AH16220	M16 x 220	✓				
	AH16250	M16 x 250	✓				
	AH16280	M16 x 280	✓				
	AH20170	M20 x 170	✓	**25,1**	*32,1*	**15,6**	**31,2**
	AH20220	M20 x 220	✓				
	AH20270	M20 x 270	✓				
MTH-A2	MI06045	M6 x 45	[x]	--	--	**3,0**	*2,8*
	MI06060	M6 x 60	✓	4,3	2,8	--	--
	MI06080	M6 x 80	✓				
	MI06120	M6 x 120	✓				
	MI06140	M6 x 140	✓				
	MI06160	M6 x 160	✓				
	MI06170	M6 x 170	✓				
	MI06180	M6 x 180	✓				
	MI08050	M8 x 50	[x]	--	--	**2,2**	**2,6**
	MI08075	M8 x 75	✓	5,7	5,1	3,6	**4,9**
	MI08090	M8 x 90	✓				
	MI08115	M8 x 115	✓				
	MI10070	M10 x 70	✓	--	--	4,8	**6,5**
	MI10090	M10 x 90	✓	6,3	*8,2*		
	MI10120	M10 x 120	✓				
	MI10150	M10 x 150	✓				
	MI12075	M12 x 75	[x]	--	--	**5,6**	**6,7**
	MI12090	M12 x 90	✓	--	--	6,4	**8,5**
	MI12110	M12 x 110	✓	9,9	*11,8*		
	MI12140	M12 x 140	✓				
	MI16090	M16 x 90	[x]	--	--	**6,8**	**8,2**
	MI16145	M16 x 145	✓	13,9	*22,1*	--	--
	MI16170	M16 x 170	✓				
	MI20120	M20 x 120	[x]	--	--	**12,0**	**28,7**
	MI20170	M20 x 170	✓	19,8	*34,5*	--	--
	MI20220	M20 x 220	✓				
MTH-A4 - Doorsteekan-ker RVS ETA 7	MIA406045	M6 x 45	[x]	--	--	**3,0**	*2,8*
	4050001400	M6 x 60	✓	*4,3*	*2,8*	--	--
	4050001408	M6 x 80	✓				
	4050001416	M8 x 50	[x]	--	--	**2,2**	**2,6**
	4050001424	M8 x 75	✓	5,7	*5,1*	3,6	**4,9**
	4050001432	M8 x 90	✓				
	4050001440	M8 x 115	✓				
	4050001448	M10 x 70	✓	--	--	4,8	**6,5**
	4050001456	M10 x 90	✓	6,3	*8,2*		
	4050001464	M10 x 120	✓				
	MIA410150	M10 x 150	✓				
	4050001472	M12 x 75	[x]	--	--	**5,6**	**6,7**
	4050001480	M12 x 90	✓	--	--	6,4	**8,5**
	4050001488	M12 x 110	✓	9,9	*11,8*		
	4050001496	M12 x 140	✓				
	MIA416090	M16 x 90	[x]	--	--	**6,8**	**8,2**
	4050001504	M16 x 145	✓	13,9	*22,1*	--	--
	MIA416170	M16 x 170	✓				
	MIA420120	M20 x 120	[x]	--	--	**12,0**	**28,7**
	MIA420170	M20 x 170	✓	19,8	*34,5*	--	--
	MIA420220	M20 x 220	✓				

1 KN ≈ 100 kg

Values *underlined and in italics* show Steel failure, **bold** values concrete failure and other indicate pull out failure.

PULL OUT INCREASINF FACTOR FOR TENSION LOADS IN HIGH RESISTANCE CONCRETE			
CONCRETE FACTOR	**C30/37**	**C40/50**	**C50/60**
Ψ_c (Non-cracked)	1,22	1,41	1,55

7. OFFICIAL DOCUMENTATION

The following documents are available through our Sales Department or on our official website: www.4tecx.com:

- European assessment ETA 05/0242 for installation in non-cracked concrete according to guideline EAD 330232-00-0601, option 7, from M6 of M20.
- AVCP certificate 1219-CPR-0006 for use in concrete.
- Declaration of performance DoP MTH.
- Declaration of performance DoP MTH-A2.
- Declaration of performance DoP MTH-A4.